OLI74 PLUS

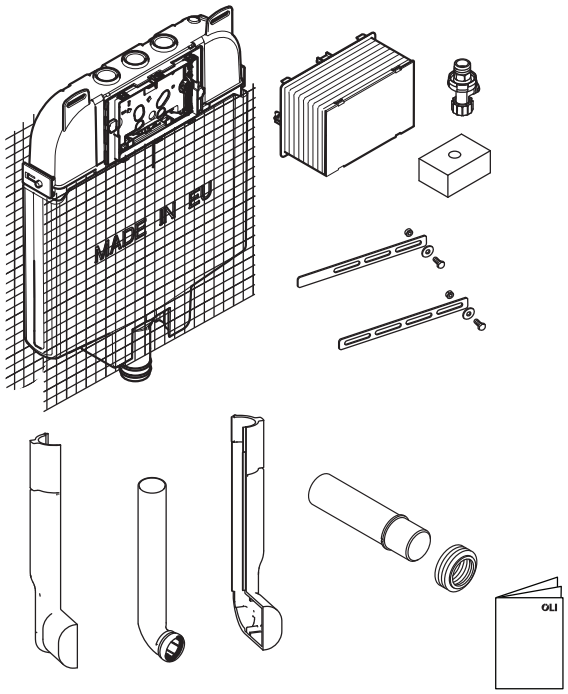

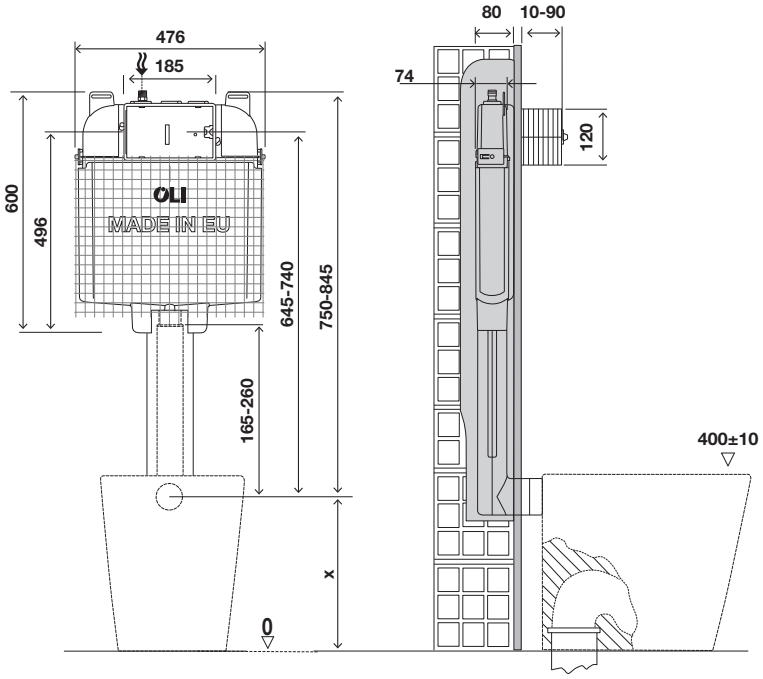

(dimensions in millimeters)

1 A

A<260mm → page 2 1B

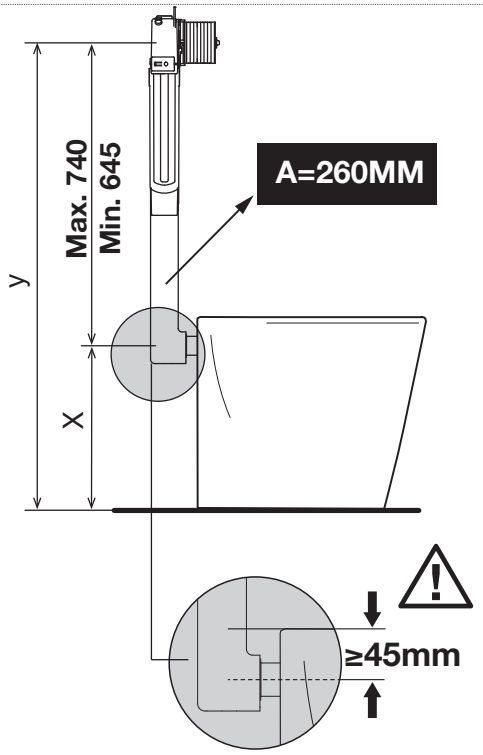

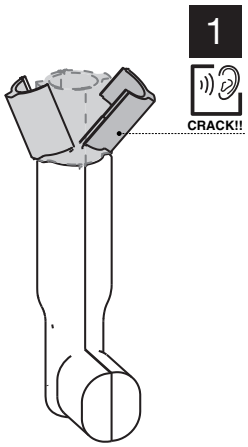

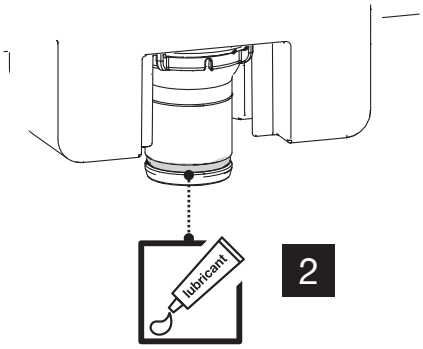

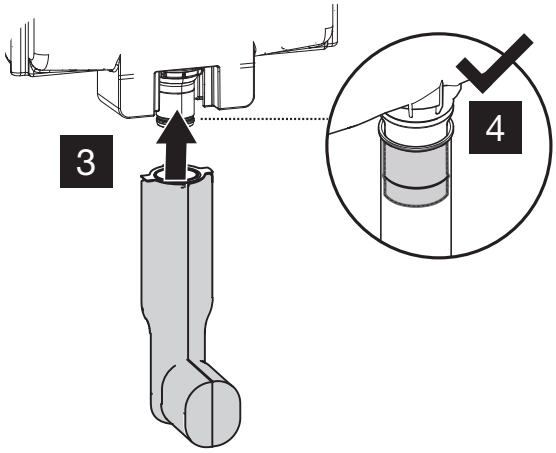

www.oli-world.com

comercial@oli-world.com | info@olisrl.it

AC10000887372.4

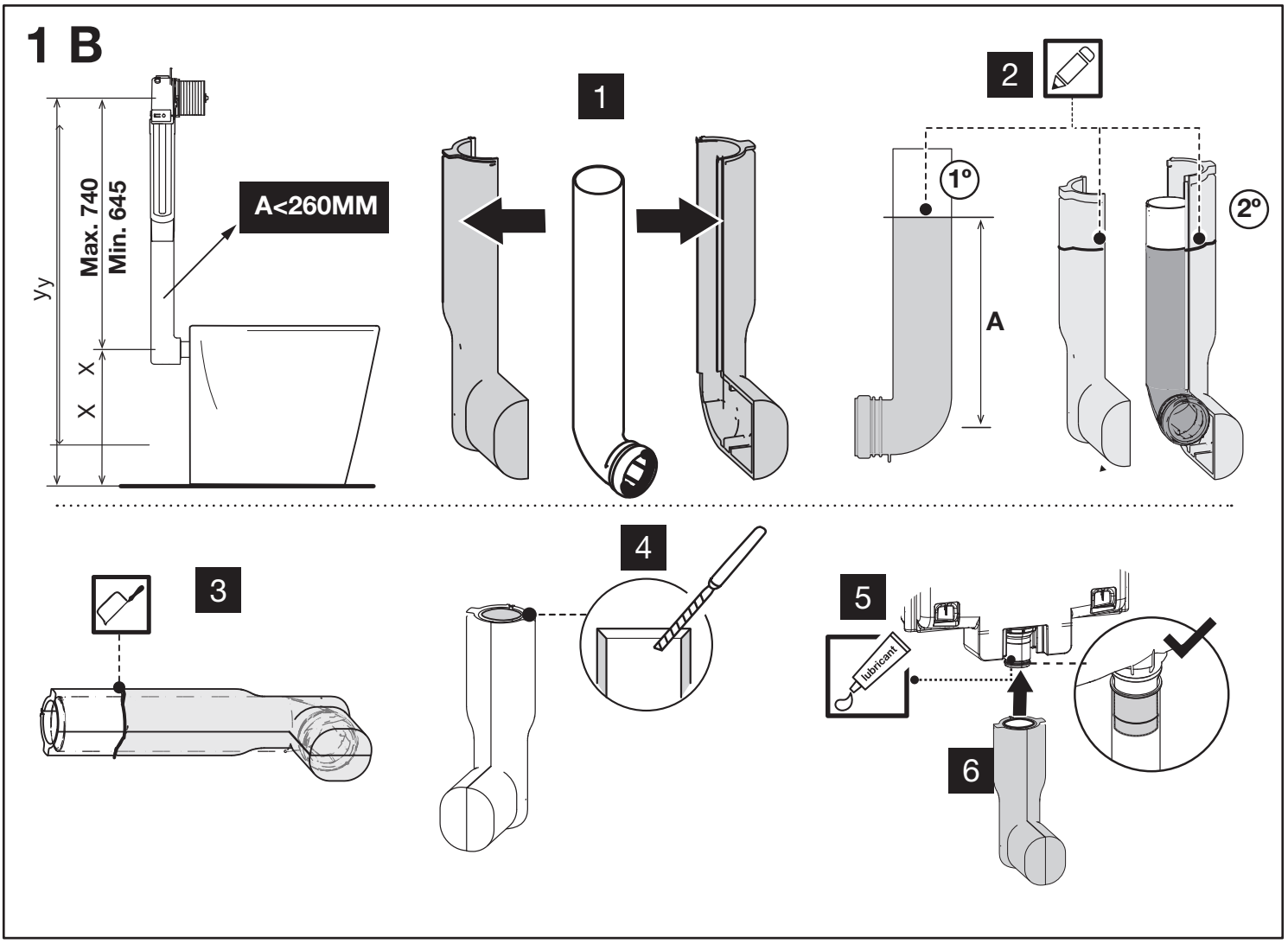
1 B
Max. 740
Min. 645
A<260MM
y y
x
x
1
2
1°
2°
A
3
4
5
lubricant
6

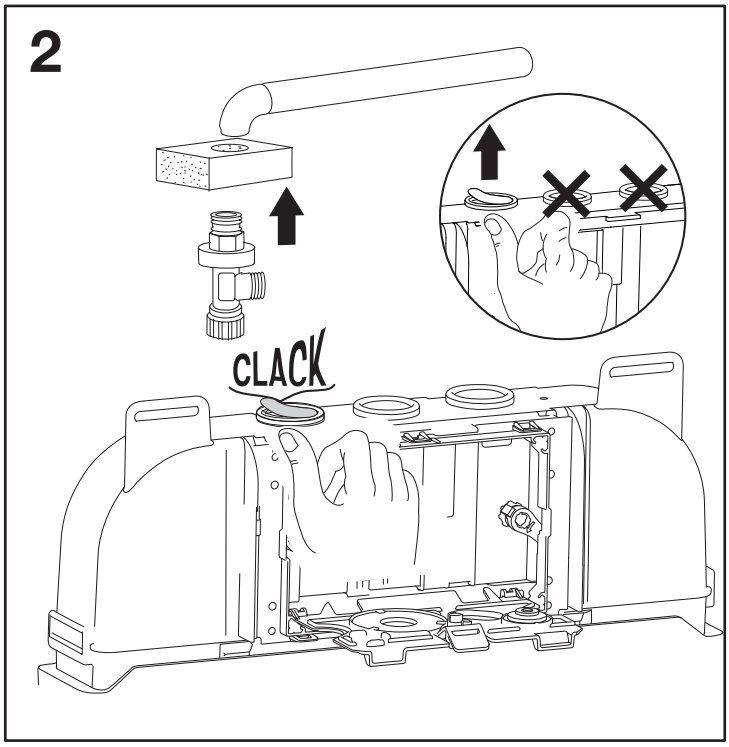
2
CLACK

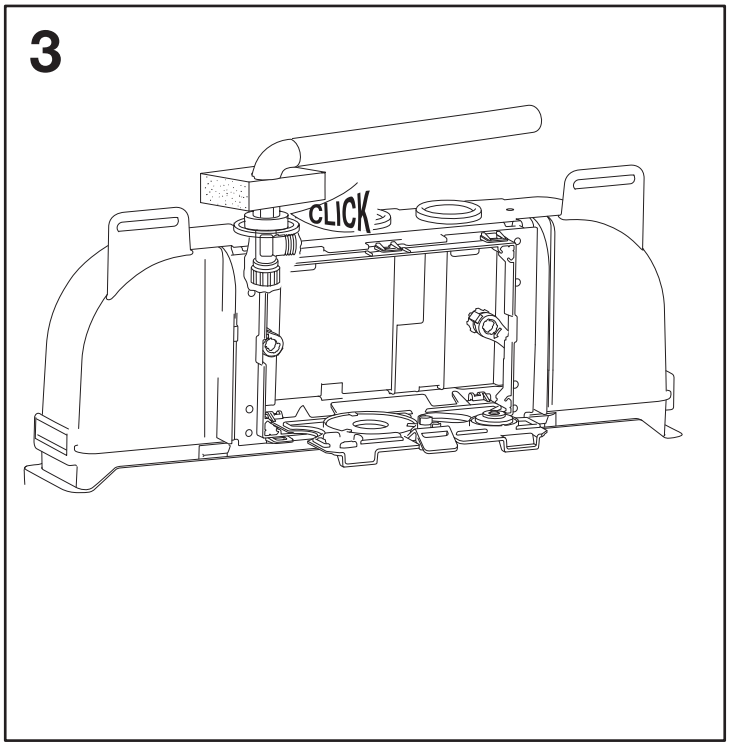
3
CLICK

4

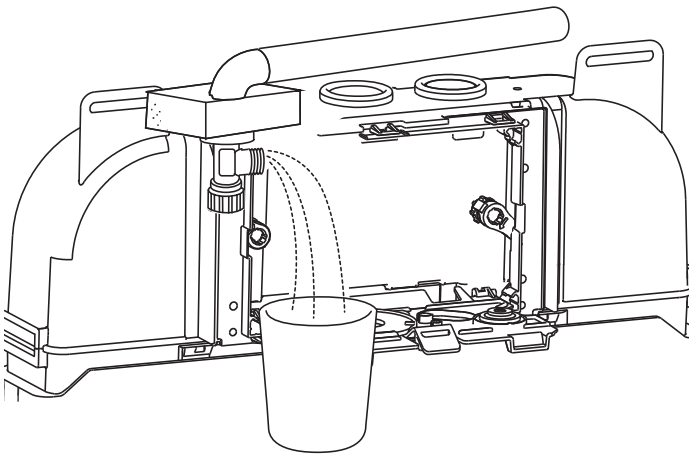

5

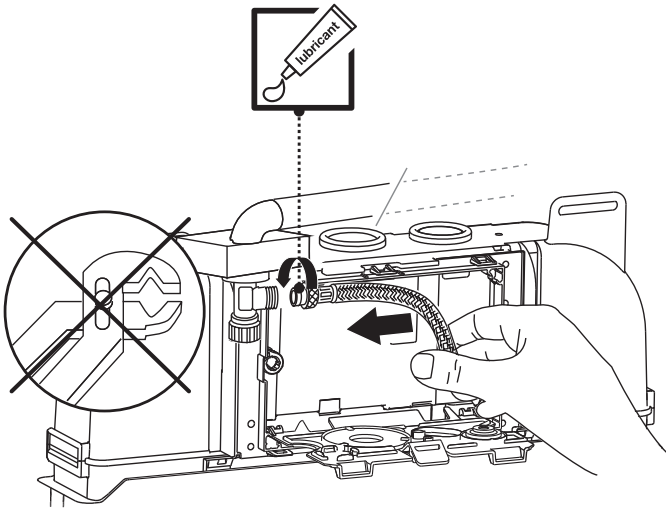

6

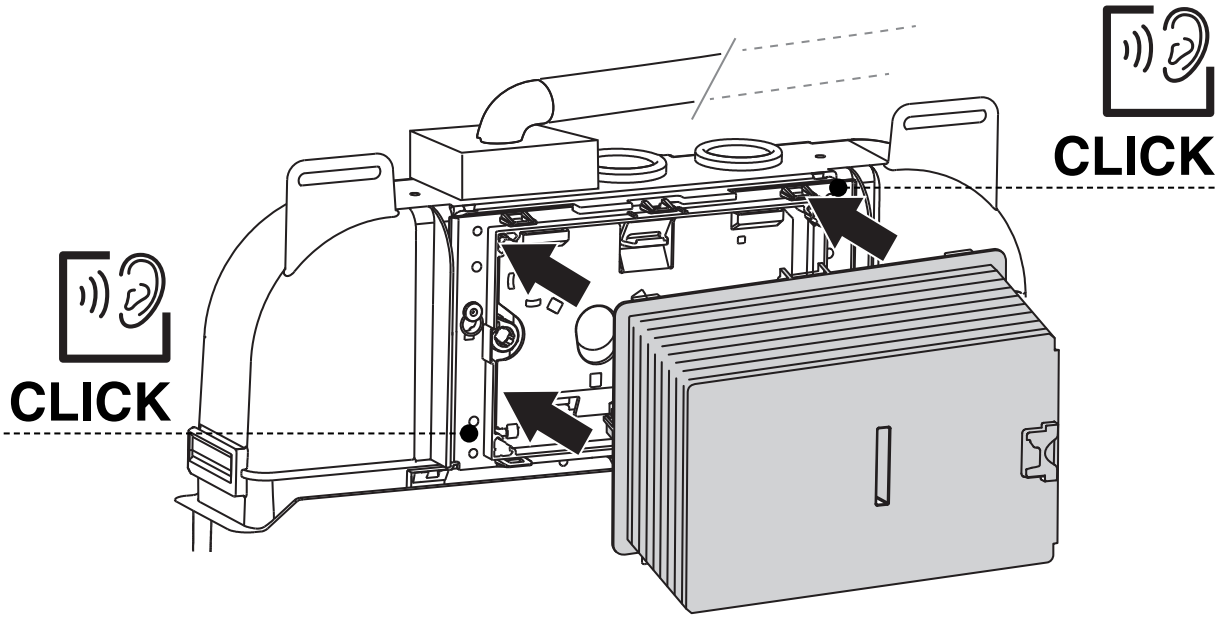

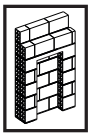

7

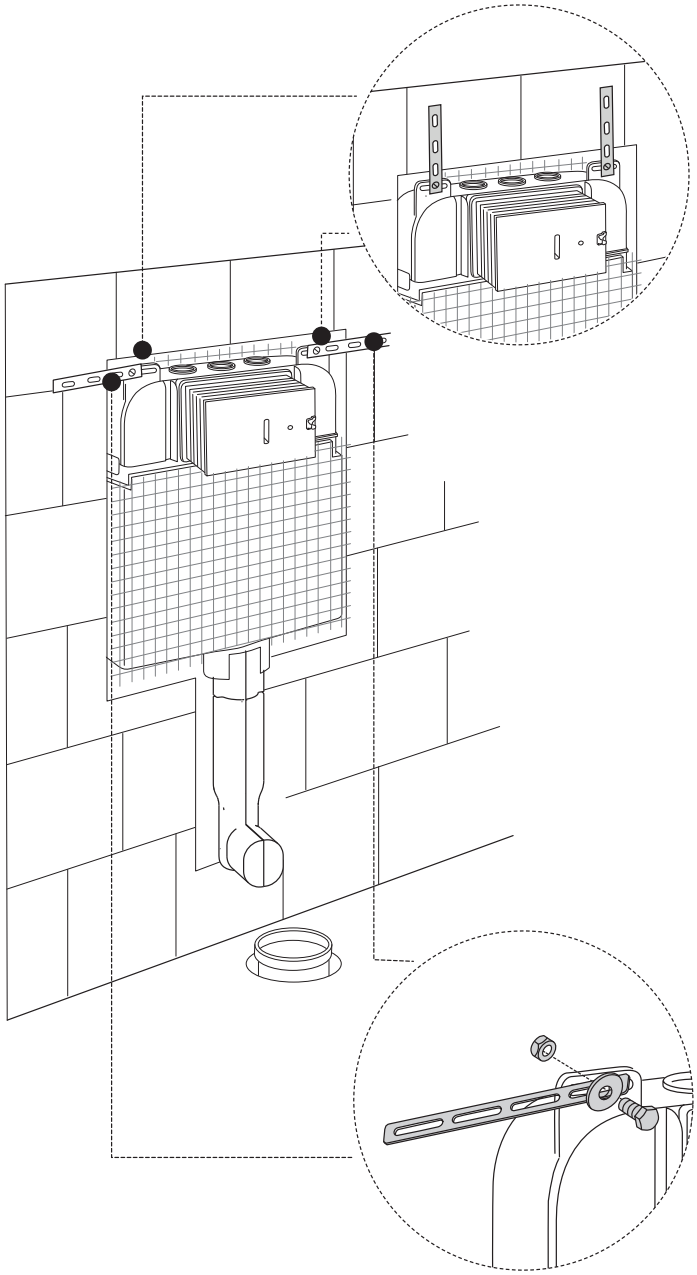

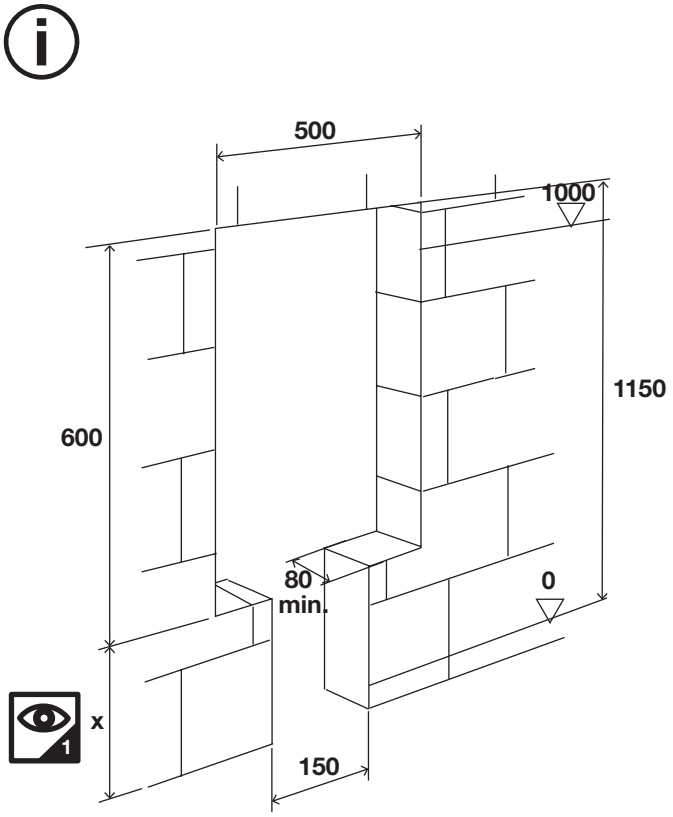

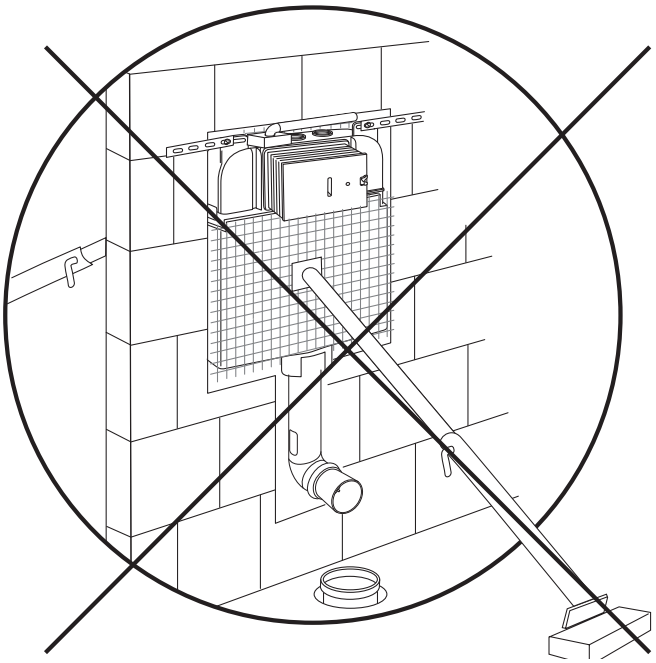

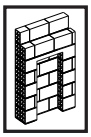

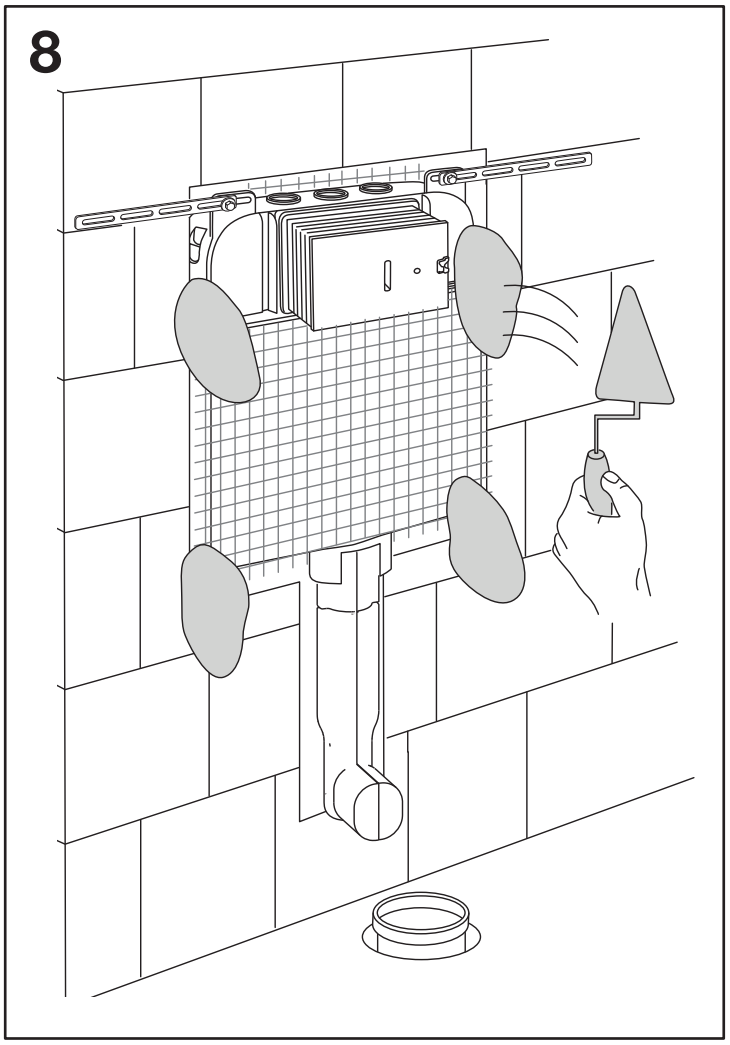
8

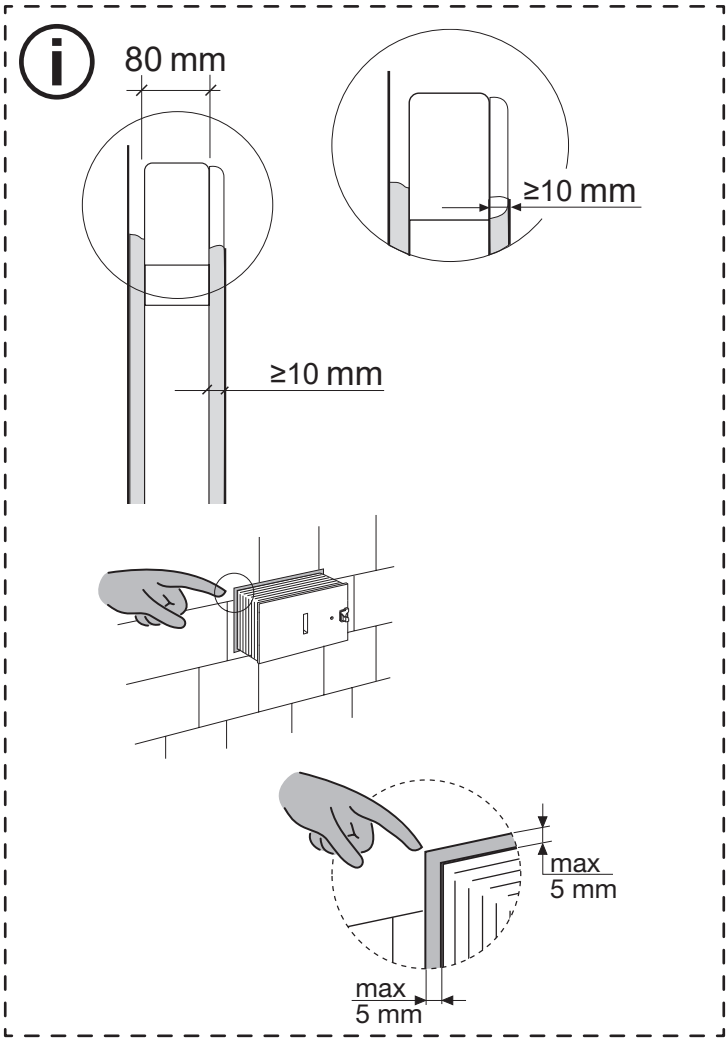
80 mm
≥10 mm
≥10 mm
max
5 mm
max
5 mm

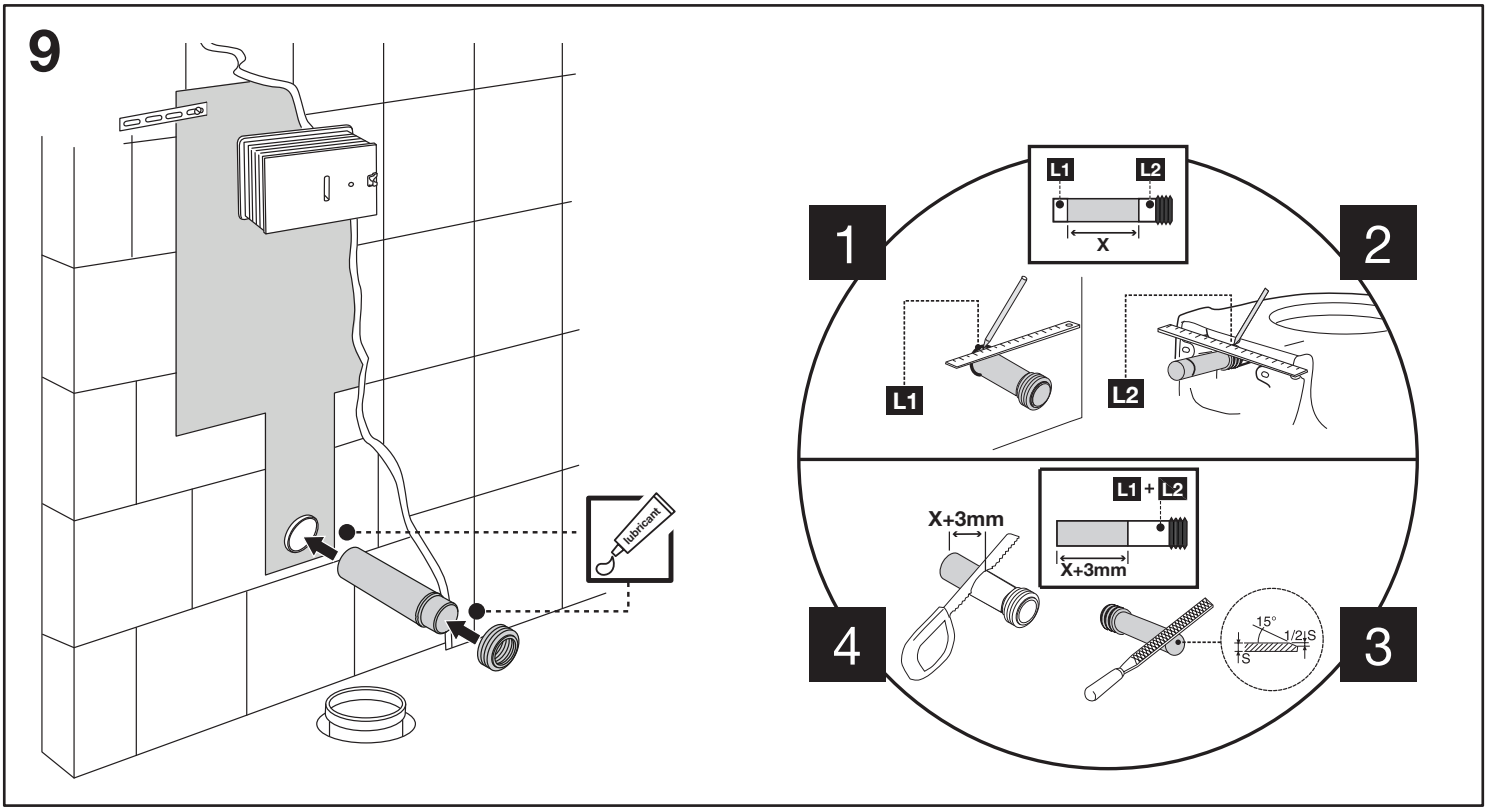
9
lubricant
1
2
3
4
L1
L2
X
L1
L2
L1 + L2
X+3mm
X+3mm
15°
1/2 S
1S

DRY WALL FIXING KIT
216640

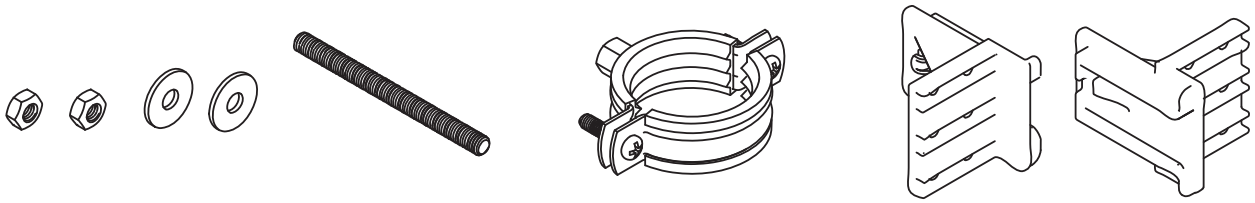

7

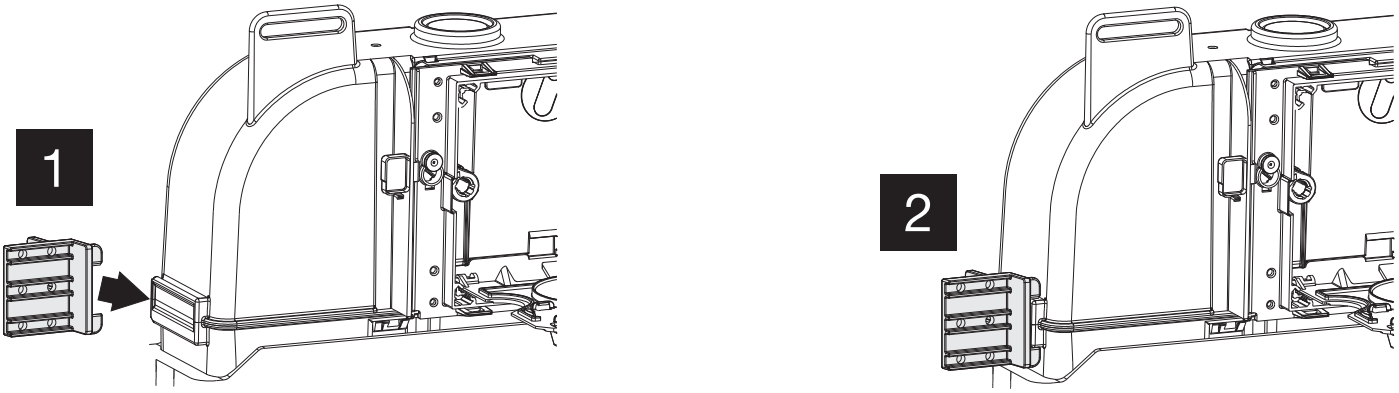

8

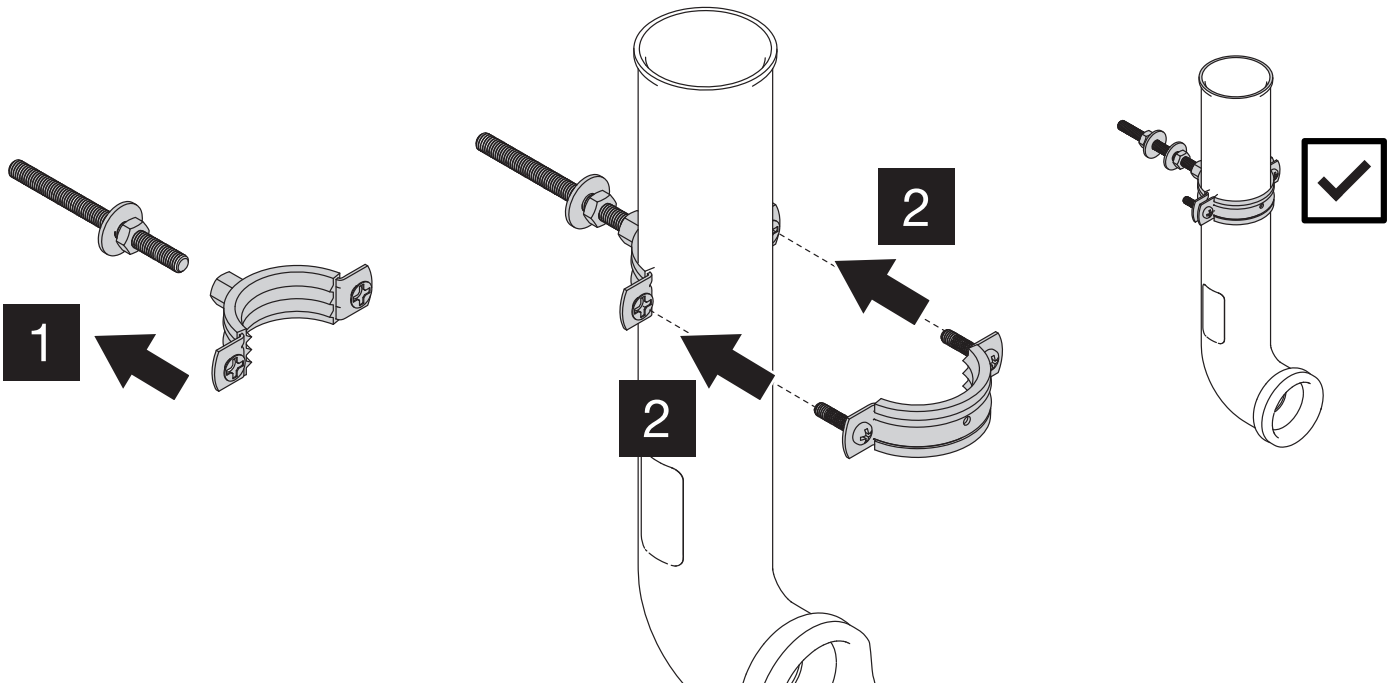

9

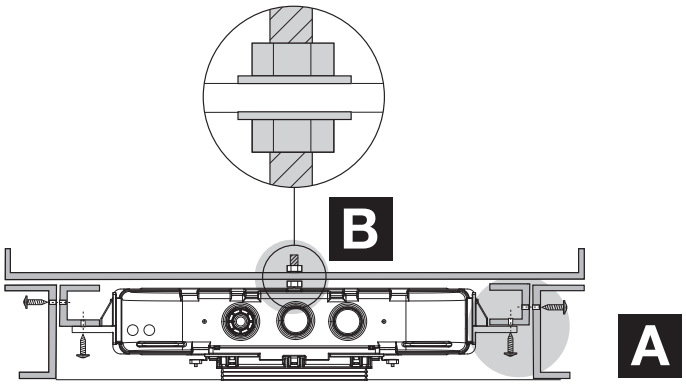

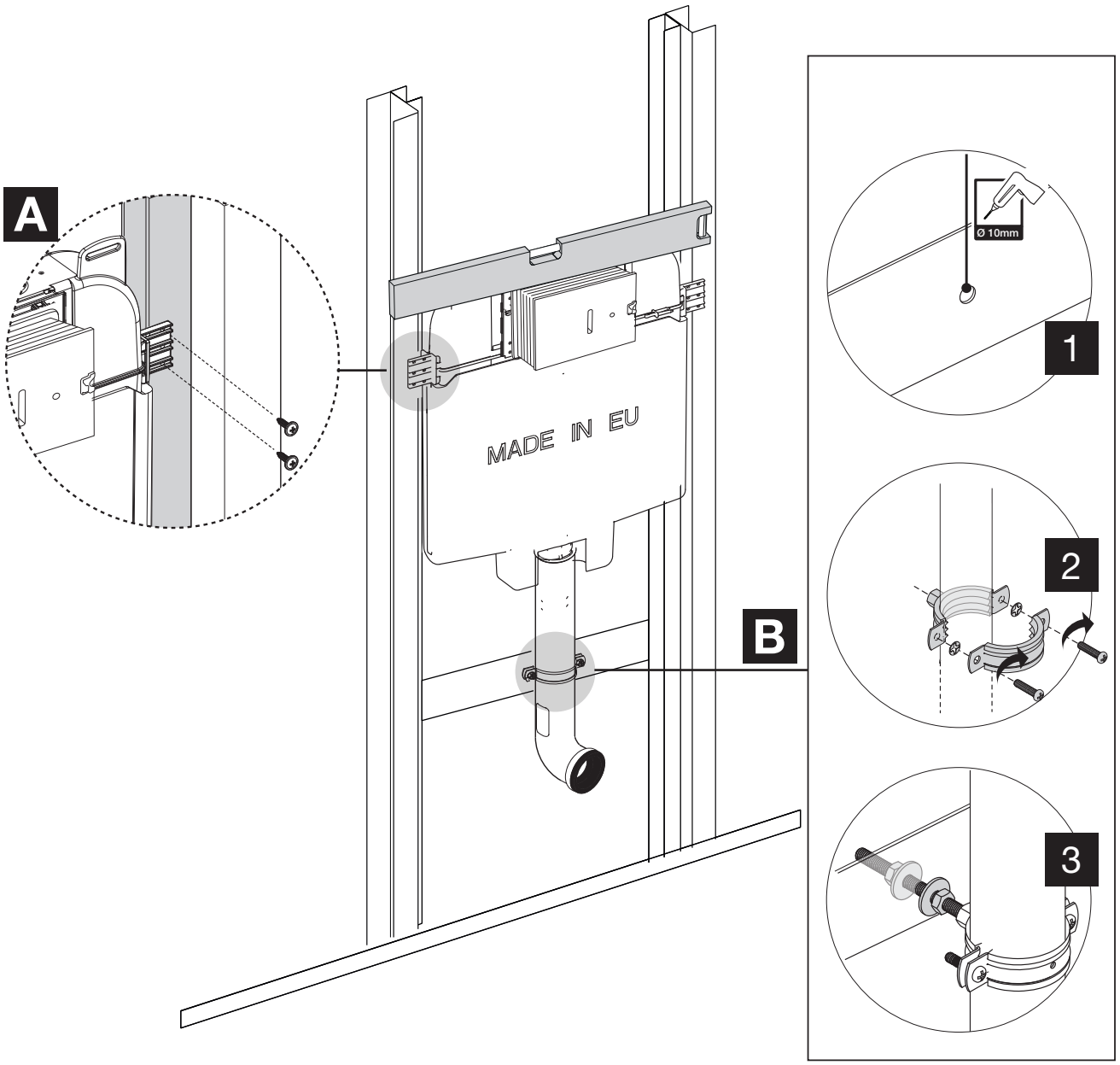

10

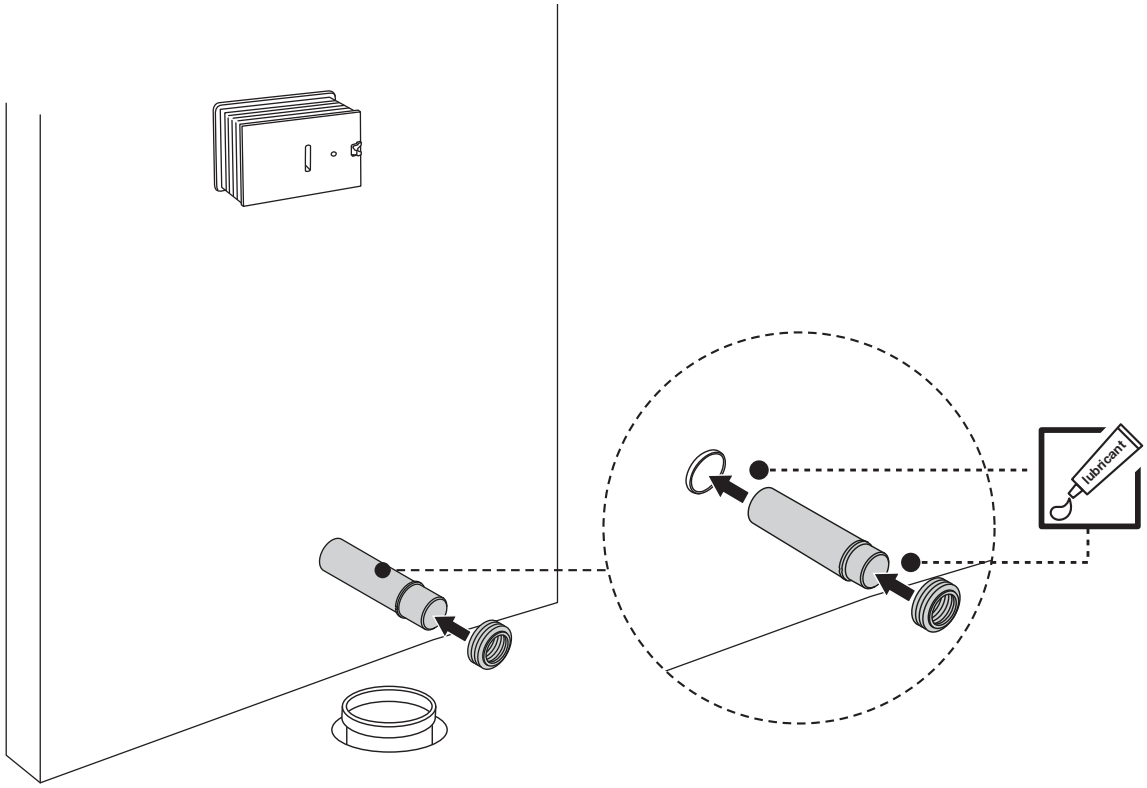

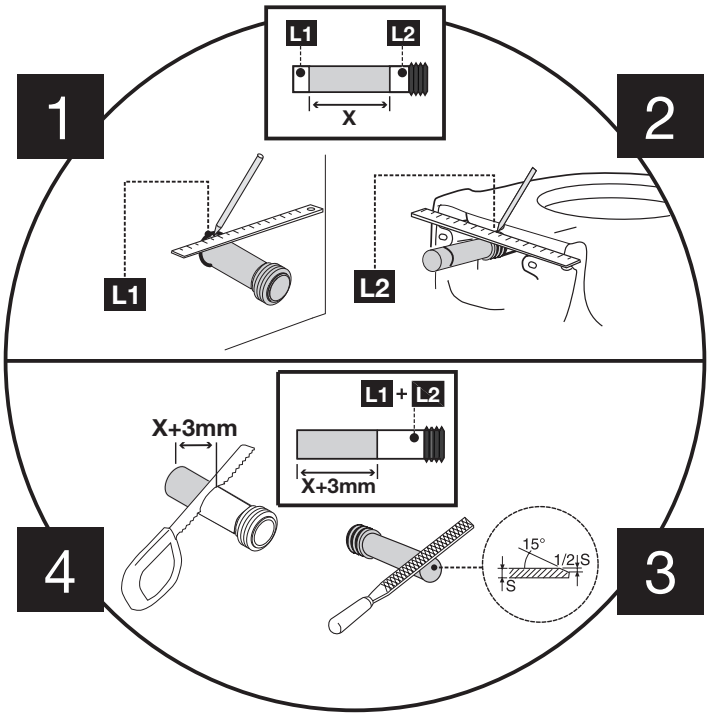

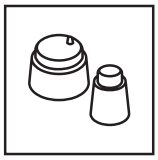
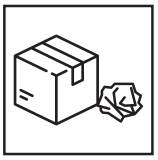

www.oli-world.com
comercial@oli-world.com | info@olisrl.it